VOR/DME BSV	APP CRS	Rwy ldg	N/A
114.05	182°	TDZE	N/A
Chan 87 (Y)		Apt Elev	894

VOR-A

HARRY CLEVER FLD (PHD)

DME or RADAR required.

Circling NA to Rwys 12 and 30. Rwy 15, 33 helicopter visibility reduction below 1 SM NA. Procedure NA at night.

MISSED APPROACH: Climb to 2100 then climbing left turn to 3000 direct BSV VOR/DME and hold.

ASOS	CLEVELAND APP CON★	UNICOM	
121.425	125.5 371.875	122.8 (CTAF)	123.3 L

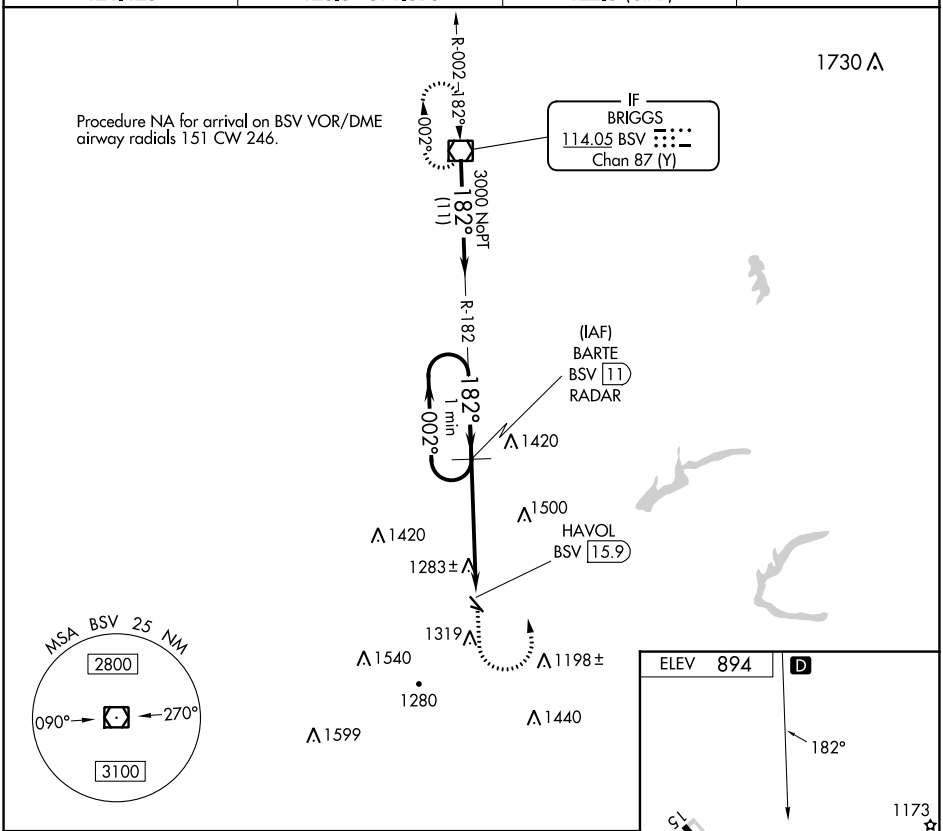

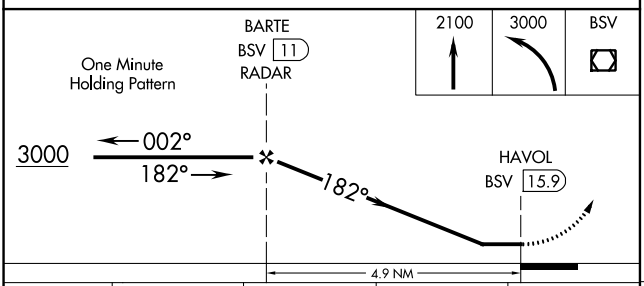

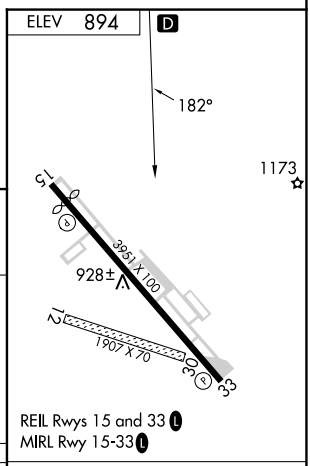

CATEGORY	A	B	C	D
C CIRCLING	1720-1¼	826 (900-1¼)	1720-2½ 826 (900-2½)	NA

FAF to MAP 4.9 NM					
Knots	60	90	120	150	180
Min:Sec	4:54	3:16	2:27	1:58	1:38

EC-2, 16 MAY 2024 to 13 JUN 2024
EC-2, 16 MAY 2024 to 13 JUN 2024